US011625261B2

(12) **United States Patent**
Jackson

(10) **Patent No.: US 11,625,261 B2**
(45) **Date of Patent: *Apr. 11, 2023**

(54) **SCALABLE ANONYMOUS DISPOSABLE DESKTOPS (SADD)**

(71) Applicant: **Desmond Armani Jackson**, Hayneville, AL (US)

(72) Inventor: **Desmond Armani Jackson**, Hayneville, AL (US)

(*) Notice: Subject to any disclaimer, the term of this patent is extended or adjusted under 35 U.S.C. 154(b) by 92 days.

This patent is subject to a terminal disclaimer.

(21) Appl. No.: **17/326,689**

(22) Filed: **May 21, 2021**

(65) **Prior Publication Data**

US 2021/0279091 A1 Sep. 9, 2021

Related U.S. Application Data

(63) Continuation of application No. 16/381,209, filed on Apr. 11, 2019, now Pat. No. 11,042,396.

(60) Provisional application No. 62/655,830, filed on Apr. 11, 2018.

(51) **Int. Cl.**

G06F 9/455	(2018.01)
H04L 9/40	(2022.01)
H04L 49/354	(2022.01)

(52) **U.S. Cl.**

CPC ***G06F 9/45558*** (2013.01); ***H04L 49/354*** (2013.01); ***H04L 63/205*** (2013.01); *G06F 2009/45562* (2013.01); *G06F 2009/45575* (2013.01); *G06F 2009/45587* (2013.01); *G06F 2009/45595* (2013.01)

(58) **Field of Classification Search**

CPC G06F 9/45558; G06F 2009/45562; G06F 2009/45575; G06F 2009/45587; G06F 2009/45595; H04L 49/354; H04L 63/205

See application file for complete search history.

(56) **References Cited**

U.S. PATENT DOCUMENTS

2006/0112342	A1	5/2006	Bantz et al.
2014/0123135	A1	5/2014	Huang et al.
2017/0026383	A1	1/2017	Hayton et al.
2019/0081930	A1	3/2019	Hunt, IV

OTHER PUBLICATIONS

International Search Report and Written Opinion in PCT/US19/27020 dated Jul. 9, 2019, 13 pages.

Primary Examiner — Gregory A Kessler

(74) *Attorney, Agent, or Firm* — Rothwell, Figg, Ernst & Manbeck, P.C.

(57) **ABSTRACT**

Information Security and privacy are the most critical aspects of the internet. The majority of the individuals that have access to the Internet have great difficulty understanding the basics of computers and how they work. This limits the ability of Internet users to protect themselves and their information while browsing the internet. With the creation and testing of SADD (Scalable Anonymous Disposable Desktops), Internet users no longer have to worry about protecting their computer or privacy.

19 Claims, 4 Drawing Sheets

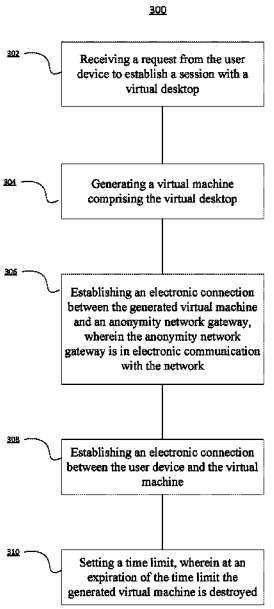

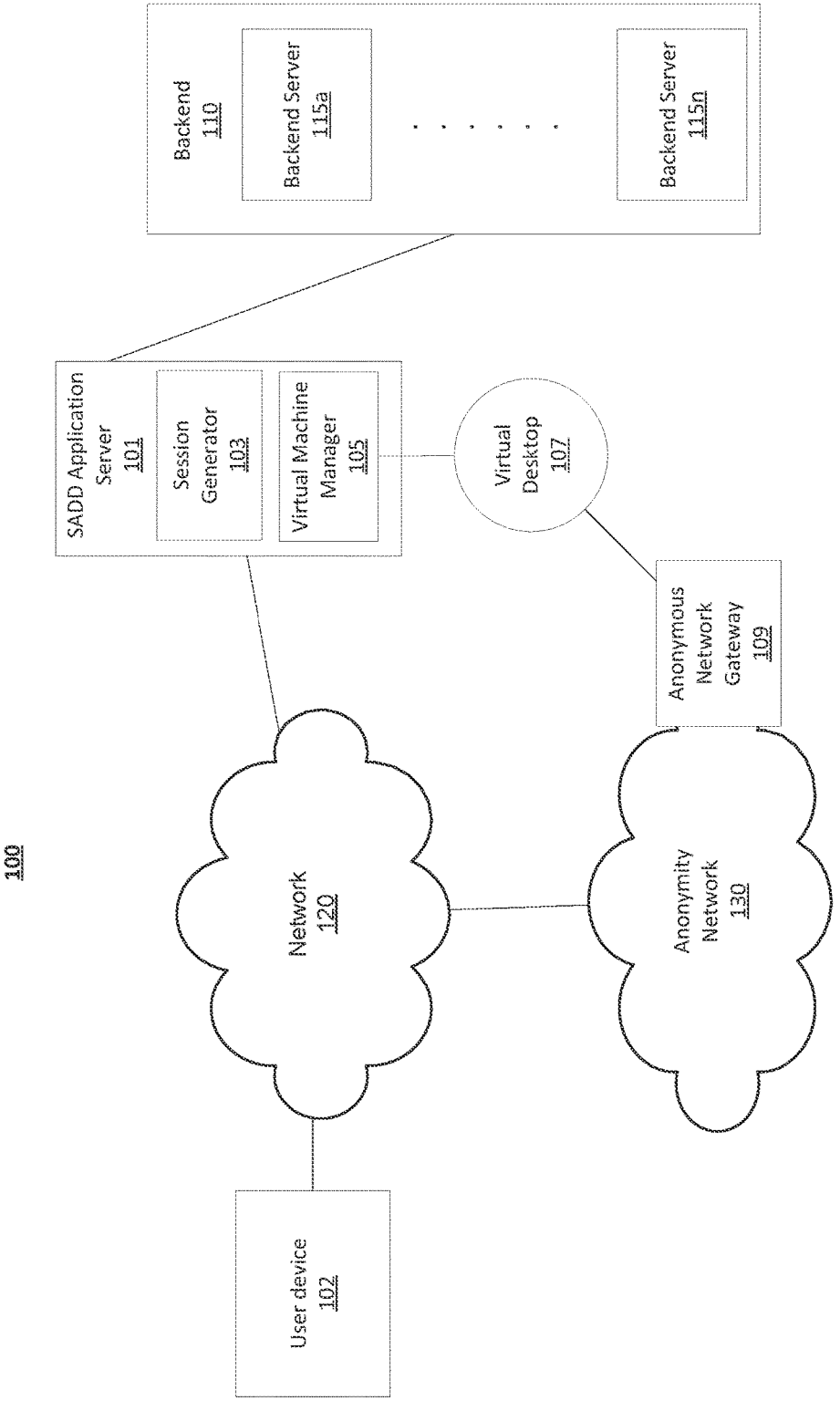
100
Backend
110
Backend Server
115a
Backend Server
115n
SADD Application
Server
101
Session
Generator
103
Virtual Machine
Manager
105
Virtual
Desktop
107
Anonymous
Network
Gateway
109
Network
120
Anonymity
Network
130
User device
102

FIG. 1

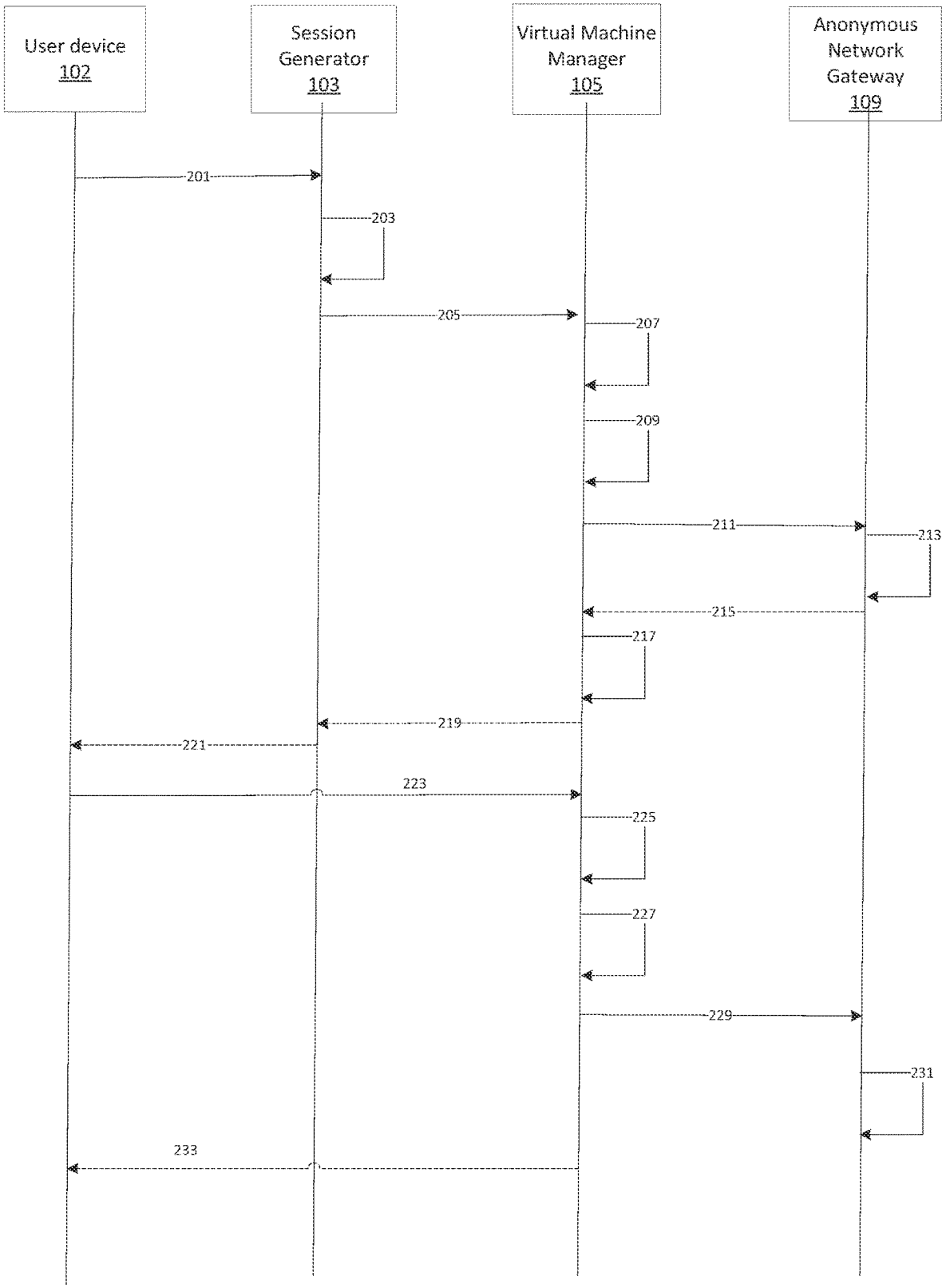
User device
102
Session
Generator
103
Virtual Machine
Manager
105
Anonymous
Network
Gateway
109
201
203
205
207
209
211
213
215
217
219
221
223
225
227
229
231
233

FIG. 2

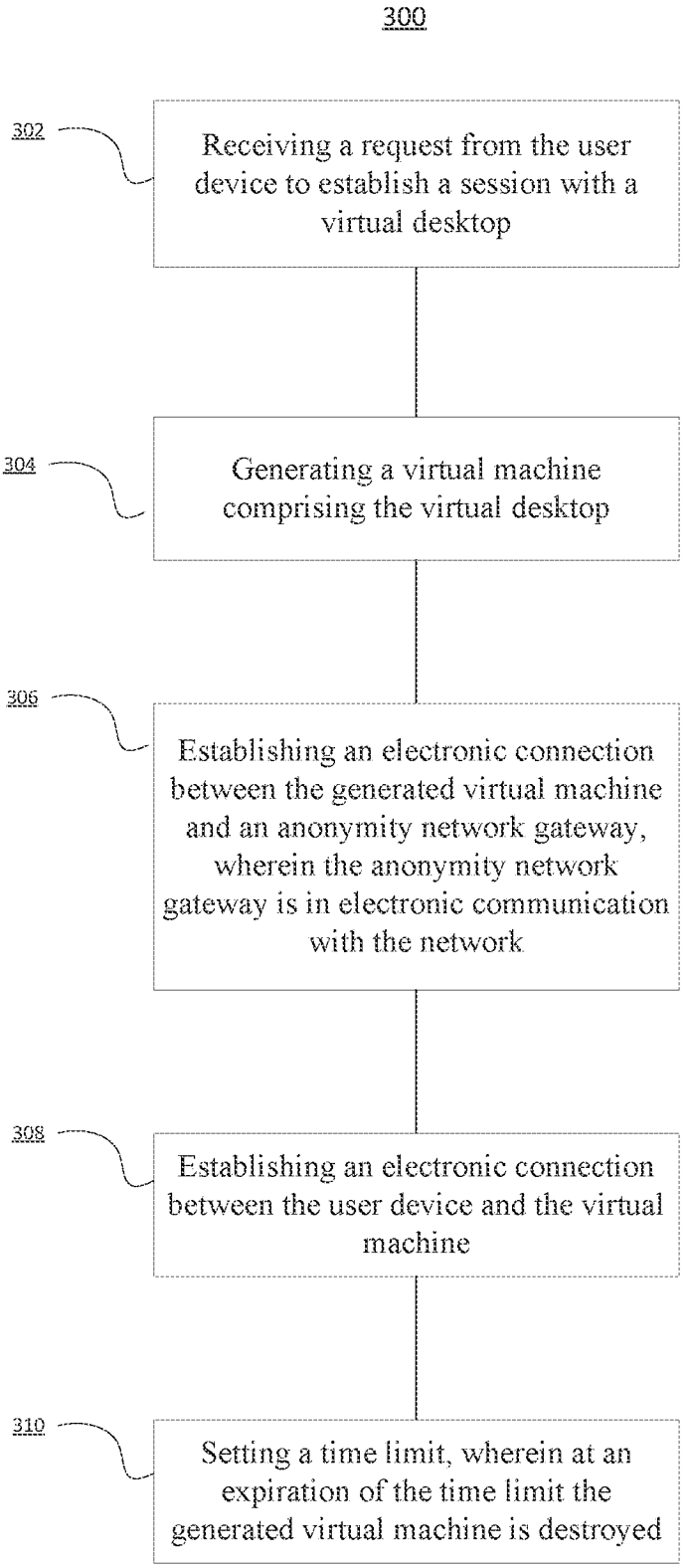
300
302
Receiving a request from the user device to establish a session with a virtual desktop
304
Generating a virtual machine comprising the virtual desktop
306
Establishing an electronic connection between the generated virtual machine and an anonymity network gateway, wherein the anonymity network gateway is in electronic communication with the network
308
Establishing an electronic connection between the user device and the virtual machine
310
Setting a time limit, wherein at an expiration of the time limit the generated virtual machine is destroyed

FIG. 3

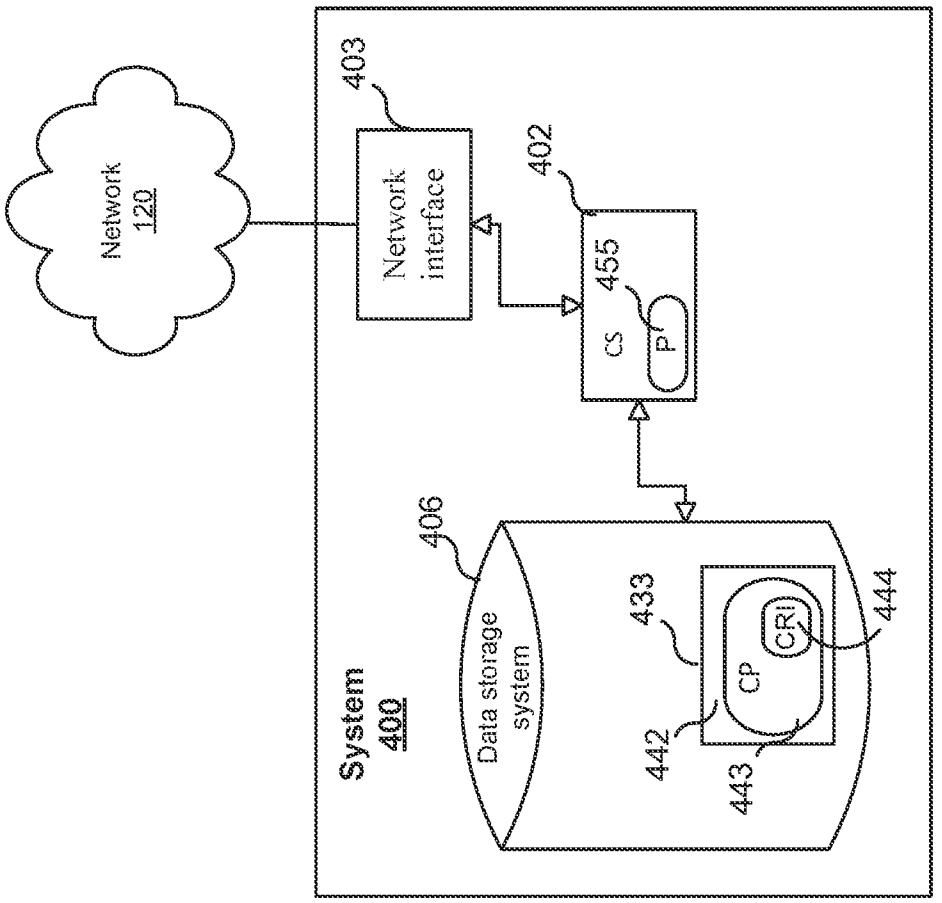
Network
120
403
Network interface
402
455
CS
P
406
Data storage system
433
CP
CRI
444
442
443
System
400

FIG. 4

SCALABLE ANONYMOUS DISPOSABLE DESKTOPS (SADD)

CROSS-REFERENCE TO RELATED APPLICATIONS

This application is a continuation of U.S. application Ser. No. 16/381,209, filed on Apr. 11, 2019, which is a non-provisional of, and claims the priority benefit of, U.S. Provisional Application No. 62/655,830, filed on Apr. 11, 2018, all of which are hereby incorporated by reference in their entirety.

TECHNICAL FIELD

The embodiments disclosed herein relate to an automated system and method for creating self-disposing Virtual Machine instances whose internet connection is routed through the TOR Project's network. More particularly, the created Virtual Machine instances will be disposed of after a certain time period.

BACKGROUND

Virtualization Technology gives users the flexibility to emulate any type of Operating System. For example, emulation allows Windows Operating Systems to run Linux and MAC OS X Operating Systems internally. This emulation is heavily used in Cloud Computing, Cyber-Security, and Business Application Development.

Created by the US Navy, the TOR Project is a free service designed to protect a user's anonymity while browsing the Internet. It does this through a term better known as "onion routing." Onion Routing cryptographically routes an internet connection through multiple proxies to prevent eavesdropping and traffic analysis attacks or hide the user's IP address. One draw-back is if the software is exploited, the real IP of the user will be shown.

SUMMARY OF THE INVENTION

In one embodiment of the present invention, a disposable desktop is provided to a user to test out some malicious software in a safe, isolated, environment.

In one embodiment of the present invention, a disposable desktop is provided to a user to protect their anonymity and provide immunity to exploits while browsing the internet.

According to one aspect, a method for providing a user device anonymous access to a network is provided. The method includes the step of receiving a request from the user device to establish a session with a virtual desktop. The method further includes the step of generating a virtual machine comprising the virtual desktop. The method further includes the step of establishing an electronic connection between the generated virtual machine and an anonymity network gateway, wherein the anonymity network gateway is in electronic communication with the network. The method further includes the step of establishing an electronic connection between the user device and the generated virtual machine. The method further includes the step of setting a time limit, wherein at an expiration of the time limit the generated virtual machine is destroyed.

In some embodiments, the request includes an indication of an operating system, and generating the virtual machine includes generating the virtual machine having the operating system.

In some embodiments, the request comprises the time limit.

In some embodiments, the method includes the steps of receiving a second request at the virtual machine from the user device to access a destination address located on the network; and routing the second request from the virtual machine to the destination address using the anonymity network gateway. In some embodiments, the anonymity network gateway utilizes onion routing to transmit the second request from the virtual machine to the destination address.

In some embodiments, the electronic connection between the virtual machine and the anonymity network gateway includes a virtual local area network connection.

In some embodiments, the method includes the steps of receiving a second request from the user device to destroy the virtual machine; and destroying the virtual machine in response to receiving the second request.

In some embodiments, the method includes the steps of determining that the expiration of the time limit has been reached; and in response to the determining, destroying the virtual machine.

According to another aspect, a non-transitory computer readable medium is provided that stores instructions configured to cause a computer to perform the method described above.

According to another aspect, a system for providing a user device anonymous access to a network is provided. The system includes a processor and a non-transitory computer readable memory coupled to the processor. The processor is configured to receive a request from the user device to establish a session with a virtual desktop. The processor is further configured to generate a virtual machine including the virtual desktop. The processor is further configured to establish an electronic connection between the generated virtual machine and an anonymity network gateway, wherein the anonymity network gateway is in electronic communication with the network. The processor is further configured to establish an electronic connection between the user device and the generated virtual machine. The processor is further configured to set a time limit, wherein at an expiration of the time limit the generated virtual machine is destroyed.

In some embodiments, the request includes an indication of an operating system, and the processor is further configured to generate the virtual machine having the operating system.

In some embodiments, the request comprises the time limit.

In some embodiments, the processor is further configured to: receive a second request at the virtual machine from the user device to access a destination address located on the network; and route the second request from the virtual machine to the destination address using the anonymity network gateway. In some embodiments, the anonymity network gateway utilizes onion routing to transmit the second request from the virtual machine to the destination address.

In some embodiments, the electronic connection between the virtual machine and the anonymity network gateway comprises a virtual local area network connection.

In some embodiments, the processor is further configured to: receive a second request from the user device to destroy the virtual machine; and destroy the virtual machine in response to receiving the second request.

In some embodiments, the processor is further configured to: determine that the expiration of the time limit has been reached; and, in response to the determination, destroy the virtual machine.

In some embodiments, the anonymity network comprises a tor network

It is to be understood that both the foregoing general description and the following detailed description are exemplary and explanatory and are intended to provide further explanation of embodiments of the invention as claimed.

BRIEF DESCRIPTION OF THE DRAWINGS

The accompanying drawings, which are included to provide a further understanding of embodiments of the invention and are incorporated in and constitute a part of this specification, illustrate embodiments of the invention and together with the description serve to explain the principles of embodiments of the invention.

FIG. **1** is a block diagram illustrating a system for scalable anonymous disposable desktops, according to some embodiments.

FIG. **2** is a sequence diagram, according to some embodiments.

FIG. **3** is a method, according to some embodiments.

FIG. **4** is a block diagram illustrating a system according to some embodiments.

DETAILED DESCRIPTION OF THE PREFERRED EMBODIMENTS

Reference will now be made in detail to embodiments of the invention, examples of which are illustrated in the accompanying drawings. The invention may, however, be embodied in many different forms and should not be construed as being limited to the embodiments set forth herein; rather, these embodiments are provided so that this disclosure will be thorough and complete, and will fully convey the concept of the invention to those skilled in the art. In the drawings, the thicknesses of layers and regions are exaggerated for clarity. Like reference numerals in the drawings denote like elements.

Normally when a user is on a public network such as the Internet, there is no anonymity or privacy because the destination website or server would see data coming from the user's IP address. Additionally, when using a VPN, while there may be partial privacy for the user, the destination web site or server would still see data coming from the IP address of the VPN, and it is possible for the user's IP address to be disclosed by the VPN.

In order to address these deficiencies and others, a scalable anonymous disposable desktop (SADD) system and service is disclosed that enables users to anonymously control self disposing desktops. Unlike VPNs, there are no downloads required at a user device, user actions are not logged or recorded, and information may not be required from users to operate the service. According to some embodiments, SADD creates disposable virtual desktops for the users to control. These virtual desktops are destroyed after a user-specified time limit (or provider specified default time limit) and have their own private networks routed through TOR or other anonymity networks. According to some embodiments, this layer of abstraction is what anonymizes the users. Anyone monitoring the user's local area network will think that the users are visiting SADD, while the destination website or server will think the user is using an anonymity network such as TOR. Even if someone were able to break TOR, which is extremely hard to do, they would have to identify users who have no internet fingerprint.

FIG. **1** is a block diagram illustrating a system for scalable anonymous disposable desktops, according to some embodiments. The system **100** may comprise a user device **102**, which may be, for example, a device such as a mobile phone, laptop, desktop computer, tablet, or the like. In some embodiments, the user device may be in electronic communication with a scalable anonymous disposable desktop (SADD) application server **101** via a network **120**, such as the Internet.

In some embodiments, the SADD application server **101** may comprise a session generator **103** and/or a virtual machine manager **105**. The session generator may comprise a module or system that generates a unique session ids for users **102**. This helps the SADD application server **101** to know where to send its information. The virtual machine manager may comprise a module or system that creates, modifies, manages, and/or destroys a virtual machine. In some embodiments, the virtual machine may comprise a virtual desktop **107**.

In some embodiments, SADD application server **101** may comprise a backend **110**, which in turn may comprise one or more backend servers **115***a* to **115***n*. In some embodiments, one or more backend servers **115** may comprise one or more of the session generator **103** and/or a virtual machine manager **105**. In this respect, according to some embodiments, the SADD application server **101** may be scaled to support a plurality of users **102** by utilizing resources of the backend servers **115** of backend **110**. In some embodiments, the virtual machine manager **105** and the session generator **103** may be embodied on the same server or device (e.g., SADD application server **101**), or distributed across multiple servers or devices (e.g., one or more backend servers **115***a-n* of backend **110**).

According to some embodiments, the virtual machine manager **105** may be in electronic communication with an anonymous network gateway **109** associated with an anonymity network **130**. In some embodiments, the anonymity network **130** comprises TOR. The anonymous network gateway **109** comprises a system or device that can provide access to public network **120** (e.g., the internet) through an anonymity network **130**, such as TOR, VPNs, or proxies.

According to some embodiments, the user **102** would gain access to the session generator **101** through a website or computer application hosted by the SADD application server **101**. The session generator **109** would generate a session having a session ID, and contact the virtual machine manager **105** with the generated session ID information, user supplied operating system, and a user supplied or system set time-limit. The virtual machine manager **105** may in turn create a virtual machine comprising the virtual desktop **107** with the session ID and operating system type. The virtual machine manager **105** may also start a timer to notify itself of when the virtual machine needs to be destroyed.

The virtual machine manager **105** may also contact the anonymous network gateway **109** and request access to the anonymity network **130**, such as a tor network. According to some embodiments, the anonymous network gateway **109** would setup a VLAN per virtual machine to encourage network isolation. This will provide an extra layer of security around all users. Once completed, the anonymous network gateway **109** will reply back to the virtual machine manager **105** with the credentials to the VLAN.

The virtual machine **107** will then connect to that VLAN and send a ready signal back to the session generator **103**. The signal would ultimately get sent and displayed to the user **102** along with the generated session ID. The user **102** can then connect to the virtual machine **107** via session id and use it however they please. According to some embodiments, the user **102** may connect to the virtual machine **107**, which may in turn anonymously connect to network **120** via network **130**.

Upon the virtual machine manager's **105** timer running out, the virtual machine **107** will be destroyed. The virtual machine manager **105** would request that the anonymous network **130** VLAN be destroyed, and optionally display to the user that the session was terminated.

FIG. **2** is a sequence diagram, according to some embodiments. FIG. **2** is a sequence diagram that shows how a user **102** may interact with the SADD system **100**, according to some embodiments. FIG. **2** also describes the back-end operations that may occur, according to some embodiments

At **201**, the user device **102** transmits to the session generator **103** a request for a unique session. In some embodiments, the request **201** comprises an indication of an operating system, which may comprise, for example, one or more of Ubuntu, *Kali* Linux, Windows, and/or Whonix. In some embodiments the request **201** further comprises a time-limit specifying the maximum duration for the generated virtual machine comprising a virtual desktop.

At **202**, the session generator **103** generates a session. In some embodiments, the generated session has a unique session identifier (ID).

At **205**, the session generator **103** transmits to the virtual machine manager **105** a request to create a Virtual Machine. In some embodiments, the request **205** comprises the generated session ID. In some embodiments, the request **205** may further comprise an operating system type, such as the operating system type specified in message **201**. In some embodiments, the session generator **103** and/or virtual machine manager **105** may use VirtualBox commands to create a virtual machine.

At **207**, the virtual machine manager **105** creates and starts a virtual machine. In some embodiments, the created virtual machine comprises a virtual desktop **107**.

At **209**, the virtual machine manager **105** starts a timer to notify itself when it is time to delete the created virtual machine.

At **211**, the virtual machine manager **105** transmits a request to an anonymous network gateway **109** a request to create a virtual local-area-network (VLAN) connection. In some embodiments, the virtual machine manager **105** and/or the anonymous network gateway **109** utilizes Whonix commands to create a gateway, such as a TOR gateway. In some embodiments, VirtualBox commands are used to create a VLAN.

At **213**, the anonymous network gateway **109** creates a VLAN connection. In some embodiments, the VLAN is created to provide isolation to each individual user

At **215**, the anonymous network gateway **109** sends a message comprising the VLAN connection information to the virtual machine manager **105** for configuration. The VLAN connection information may comprises, for example, one or more of an IP address of the VLAN, an IP address of a created virtual machine on the VLAN, and an IP address of the created gateway to the anonymity network.

At **217**, the virtual machine manager **105** connects to the VLAN using the received VLAN connection information. In some embodiments, the virtual machine manager **105** utilizes VirtualBox commands to connect the virtual machine to the VLAN and/or the virtual machine to the anonymity network gateway.

At **219**, the virtual machine manager **105** sends a ready signal to the session generator **103**. In some embodiments, the ready signal **219** comprises an IP address to access the virtual machine and a generated session ID to the virtual machine.

At **221**, the session generator **103** transmits the ready signal to the user **102**.

At **223**, the user device **102** transmits a request towards the virtual machine manager **105** connect to the generated virtual machine. In some embodiments, the request comprises the session ID and/or the IP address to access the virtual machine. In some embodiments, noVNC (web based remote desktop access) or other virtual network computing (VNC) software is used to establish a connection to the virtual machine utilizing the session ID such that the user device **102** can send commands to the generated virtual machine **107**.

At **225**, the virtual machine manager **105** keeps the session alive between the virtual machine (e.g., virtual desktop) and the anonymous network via the anonymous network gateway **109**. While the session is alive, the user device **102** may send commands to the virtual machine and/or virtual desktop. In some embodiments, the commands sent by the user device **102** to the virtual machine and/or virtual desktop cause the generated virtual machine **107** to access a public network **120**. In some embodiments, the commands from the user device **102** cause the generated virtual machine **107** to access the public network **120** through the anonymity network **130** via the anonymous network gateway **109**. In some embodiments, the virtual machine manager keeps the session alive until the timer runs out.

At **227**, when the timer runs out, the virtual machine manager **105** destroys the virtual machine. In some embodiments, VirtualBox commands are used to turn off the virtual machine and/or to turn off the anonymous gateway. In some embodiments, secure-delete on Linux may be utilized to destroy all virtual machine files, which may comprise file shredding at the binary level.

At **229**, the virtual machine manager **105** transmits a request to the anonymous network gateway **109** to delete the VLAN connection. In some embodiments, the request **229** may comprise one or more VirtualBox commands to delete a VLAN.

At **231**, the anonymous network gateway **109** deletes the VLAN.

At **233**, the virtual machine manager sends and displays to the user **102** that the session has been terminated.

FIG. **3** is a method, according to some embodiments. Method **300** is a method for providing a user device **102** anonymous access to a network **120**. In some embodiments, method **300** may be performed by SADD application server **101**.

At step **302**, the SADD application server **101** receives a request from the user device **102** to establish a session with a virtual desktop.

At step **304**, the SADD application server **101** generates a virtual machine **107** comprising the virtual desktop.

At step **306**, the SADD application server **101** establishes an electronic connection between the generated virtual machine **107** and an anonymity network gateway **109**, wherein the anonymity network gateway is in electronic communication with the network **120**.

At step **308**, the SADD application server **101** establishes an electronic connection between the user device **102** and the generated virtual machine **107**.

At step **310**, the SADD application server **101** sets a time limit, wherein at an expiration of the time limit the generated virtual machine **107** is destroyed.

FIG. **4** is a block diagram illustrating a system, according to some embodiments. In some embodiments, system **400** is SADD application server **101**. As shown in FIG. **4**, system **400** may comprise: a data processing system (DPS) **402**, which may include one or more processors **455** (e.g., a general purpose microprocessor and/or one or more other data processing circuits, such as an application specific integrated circuit (ASIC), field-programmable gate arrays (FPGAs), and the like); a network interface **403** for use in connecting system **400** to network **120** and/or network **130**; and local storage unit (a.k.a., "data storage system") **406**, which may include one or more non-volatile storage devices and/or one or more volatile storage devices (e.g., random access memory (RAM)). In embodiments where system **400** includes a general purpose microprocessor, a computer program product (CPP) **433** may be provided. CPP **433** includes a computer readable medium (CRM) **442** storing a computer program (CP) **443** comprising computer readable instructions (CRI) **444**. CRM **842** may be a non-transitory computer readable medium, such as, but not limited, to magnetic media (e.g., a hard disk), optical media (e.g., a DVD), memory devices (e.g., random access memory), and the like. In some embodiments, the CRI **444** of computer program **443** is configured such that when executed by data processing system **402**, the CRI causes the system **400** to perform steps described herein (e.g., steps described above and with reference to the flow charts). In other embodiments, system **400** may be configured to perform steps described herein without the need for code. That is, for example, data processing system **402** may consist merely of one or more ASICs. Hence, the features of the embodiments described herein may be implemented in hardware and/or software.

While various embodiments of the present disclosure are described herein, it should be understood that they have been presented by way of example only, and not limitation. Thus, the breadth and scope of the present disclosure should not be limited by any of the above-described exemplary embodiments. Moreover, any combination of the above-described elements in all possible variations thereof is encompassed by the disclosure unless otherwise indicated herein or otherwise clearly contradicted by context. It will be apparent to those skilled in the art that various modifications and variations can be made in the method and system for suggesting revisions to an electronic document without departing from the spirit or scope of the invention. Thus, it is intended that embodiments of the invention cover the modifications and variations of this invention provided they come within the scope of the appended claims and their equivalents.

Additionally, while the processes described above and illustrated in the drawings are shown as a sequence of steps, this was done solely for the sake of illustration. Accordingly, it is contemplated that some steps may be added, some steps may be omitted, the order of the steps may be re-arranged, and some steps may be performed in parallel.

The invention claimed is:

1. A method for providing a secure virtual machine over a network, the method comprising:

generating a virtual machine;

establishing an electronic connection between the generated virtual machine and an anonymity network gateway, wherein the anonymity network gateway is in electronic communication with the network through an anonymity network; and

establishing an electronic connection between a user device and the generated virtual machine.

2. The method of claim **1**, further comprising:

receiving a request from the user device to establish a session with the virtual machine.

3. The method of claim **2**, wherein the request comprises an indication of an operating system type, and wherein generating the virtual machine comprises generating the virtual machine having the operating system type.

4. The method of claim **1**, further comprising:

receiving a request at the virtual machine from the user device to access a destination address located on the network; and

routing the request from the virtual machine to the destination address through the anonymity network using the anonymity network gateway.

5. The method of claim **4**, wherein the anonymity network gateway utilizes onion routing to transmit the second request from the virtual machine to the destination address through the anonymity network.

6. The method of claim **1**, wherein the electronic connection between the virtual machine and the anonymity network gateway comprises a virtual local area network connection.

7. The method of claim **1**, wherein the anonymity network comprises a tor network.

8. The method of claim **1**, wherein the electronic connection between the user device and the generated virtual machine is over a public network.

9. The method of claim **1**, wherein the virtual machine comprises a virtual desktop.

10. A non-transitory computer-readable medium storing instructions configured to cause a computer to perform the method of claim **1**.

11. A system for providing a secure virtual machine over a network, the system comprising:

a processor;

a non-transitory computer readable memory coupled to the processor, wherein the processor is configured to:

generate a virtual machine;

establish an electronic connection between the generated virtual machine and an anonymity network gateway, wherein the anonymity network gateway is in electronic communication with the network through an anonymity network; and

establish an electronic connection between a user device and the generated virtual machine.

12. The system of claim **11**, wherein the processor is further configured to:

receive a request from the user device to establish a session with the virtual machine.

13. The system of claim **12**, wherein the request comprises an indication of an operating system type, and wherein generating the virtual machine comprises generating the virtual machine having the operating system type.

14. The system of claim **11**, wherein the processor is further configured to:

receive a request at the virtual machine from the user device to access a destination address located on the network; and

route the request from the virtual machine to the destination address using the anonymity network gateway.

15. The system of claim 14, wherein the anonymity network gateway utilizes onion routing to transmit the second request from the virtual machine to the destination address.

16. The system of claim 11, wherein the electronic connection between the virtual machine and the anonymity network gateway comprises a virtual local area network connection.

17. The system of claim 11, wherein the anonymity network comprises a tor network.

18. The system of claim 11, wherein the electronic connection between the user device and the generated virtual machine is over a public network.

19. The system of claim 11, wherein the virtual machine comprises a virtual desktop.

* * * * *